# LIBRARY

## MY TEAM

| | |
|---|---|
| 01 | HASAN ABU MEHSIN<br>202010307 |
| 02 | MOHAMMED ALAMER<br>201910951 |
| 03 | MOHAMMED DARAGHMEH<br>201911674 |

# GOALS AND OBJECTIVESTENT

THE PROJECT FUNCTIONAL REQUIREMENTS

1. LIST ALL BOOKS FOR USER
2. THE ADMIN CAN ADD A BOOK
3. SEARCH FOR A SPECIFIC BOOK
4. DELETE A BOOK
5. AUTHORIZATION (REGISTER AND LOGIN)
6. GET ALL AUTHOR
7. ADD AN AUTHOR
8. SEARCH FOR A SPECIFIC AUTHOR
9. DELETE A AUTHOR
10. CHANGE PASSWORD FOR THE USER
11. LOGOUT

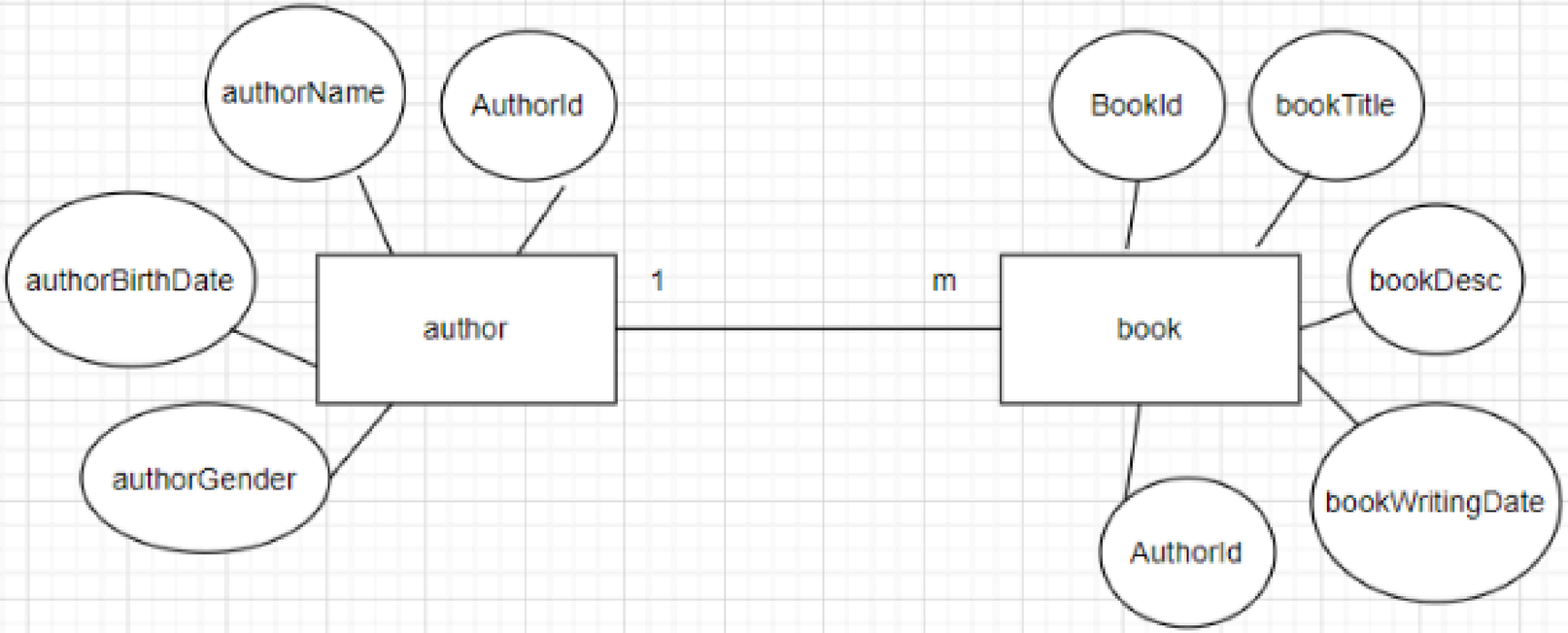
authorName
AuthorId
authorBirthDate
author
authorGender
1
m
BookId
bookTitle
bookDesc
book
bookWritingDate
AuthorId

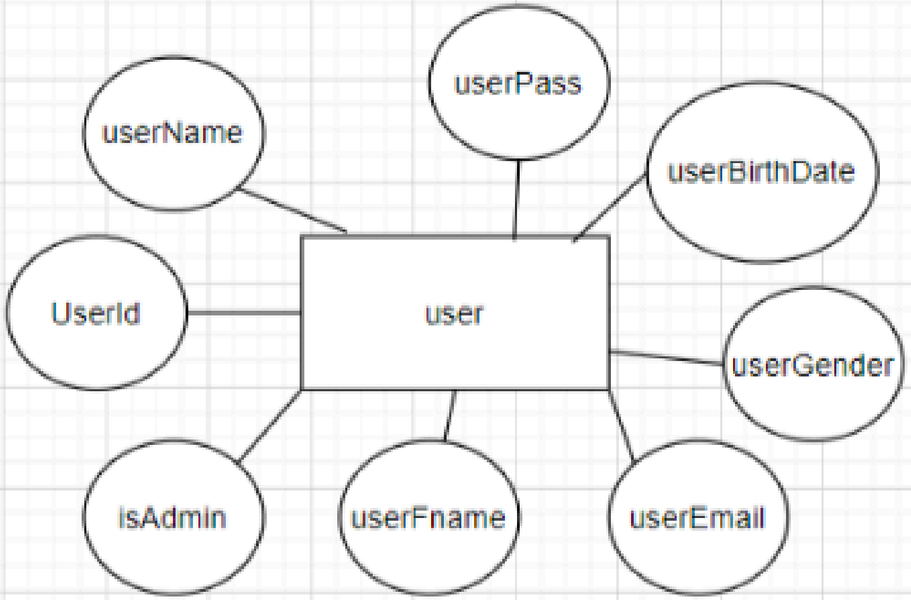
userPass
userName
userBirthDate
UserId
user
userGender
isAdmin
userFname
userEmail

Library Home Books Authors Change password Logout

# Login

Username

Enter your Username

Password

Enter your Password

Sign in

Not a member? Sign Up

Library Home Books Authors Change password Logout

# Register

Name

Enter Your Full Name

Username

Enter a valid username

Email

Enter Your Email

Password

Enter a Strong password

Gender : Male ○ Female ○

Already have account? Login

Sign Up

# Change Password

Old Password

Enter your Old Password

New Password

Enter your New Password

Change Password

# Show the Library

This project was developed by Hasan Abu mehsin,Mohammed alamer and Mohammed Daraghmeh for the Web Programming course at Arab American University. It utilizes ASP.NET MVC 6 with a Microsoft SQL Server database as the backend. In the future, we plan to enhance the project by integrating ReactJS for the frontend, combining it with the existing MVC architecture for a more dynamic and modern user experience. Feel free to explore the additional pages via the navigation bar. Thank you for your time, and we hope you enjoy exploring our project!

Library Home Books Authors Change password Logout

# Books

Book Name

Book Name

Book Description

Book Description

Author

laeth

Publish Date

ةنس/رهش/موي

Add Book Clear

Search for specific book

enter Book Title

Search

| # | Name | Description | Author | Published On | Action |
|---|---|---|---|---|---|

# Author

Author Name

Birth Date

ةنس/رهش/موي

## Gender

Male Female

Add Author Clear

Search... Search

| # | Name | Birth Date | Gender | Action |
|---|---|---|---|---|